Wall mounted unit Technical Data

FWT-HTV

FWT02HATVMV1
FWT03HATVMV1
FWT04HATVMV1
FWT05HATVMV1
FWT06HATVMV1

EEDEN25

TABLE OF CONTENTS

FWT-HTV

1	Features	4
	FWT-HTV	4
2	Specifications	5
3	Options	7
4	Dimensional drawings	8
5	Piping diagrams	9
6	Wiring diagrams	10
	Wiring Diagrams - Single Phase	10
7	Sound data	11
	Sound Pressure Spectrum	11
8	Installation	14
	Exploded view	14

1 Features

1 - 1 FWT-HTV

BLDC fan motor unit for wall mounting ..

1

- Modern style decoration panel in white
- DC fan-motor
- 5 different sizes from 2.4 kW to 5.3 kW
- 230V ON-OFF internal 3-way valve available as factory mounted
- Double filtration stage (Gin-Ion filter + PM2.5 filter)
- Using electrons to trigger chemical reactions with air borne particles, the Flash Streamer breaks down allergens such as pollen and fungal allergens and removes bothersome odours providing a better, cleaner air
- Modbus gateway available as accessory for BMS integration

Flash Streamer

2 Specifications

2 - 1 Specifications

Technical specifications					FWT02HTV	FWT03HTV	FWT04HTV	FWT05HTV	FWT06HTV
Cooling capacity (standard conditions)	Latent capacity 2-pipe	High		kW	0.66 (1)	0.63 (1)	0.88 (1)	0.98 (1)	1.09 (1)
	Sensible capacity 2-pipe	Low		kW	1.52 (1)	1.61 (1)	1.88 (1)	2.64 (1)	3.19 (1)
		Medium		kW	1.70 (1)	1.85 (1)	2.37 (1)	3.17 (1)	3.58 (1)
		High		kW	1.77 (1)	2.07 (1)	2.61 (1)	3.56 (1)	4.19 (1)
	Total capacity 2-pipe	Low		kW	2.11 (1)	2.23 (1)	2.58 (1)	3.37 (1)	4.07 (1)
		Medium		kW	2.32 (1)	2.55 (1)	3.19 (1)	4.07 (1)	4.54 (1)
		High		kW	2.43 (1)	2.70 (1)	3.49 (1)	4.54 (1)	5.28 (1)
Heating capacity (standard conditions)	Capacity 2-pipe	Low		kW	1.96 (2)	2.02 (2)	2.64 (2)	4.04 (2)	4.54 (2)
		Medium		kW	2.37 (2)	2.40 (2)	3.19 (2)	4.54 (2)	4.89 (2)
		High		kW	2.73 (2)	2.96 (2)	3.72 (2)	4.89 (2)	6.24 (2)
Power input	Low			kW	0.007		0.010	0.015	0.020
	Med.			kW	0.008	0.009	0.016	0.020	0.027
	High			kW	0.010	0.012	0.020	0.025	0.043
FCEER CLASS					A (1)				B (1)
FCCOP CLASS					A (2)		B (2)		
Dimensions	Unit	Height		mm	288			317	
		Width		mm	870			1,089	
		Depth		mm	234			275	
	Packed unit	Height		mm	314			366	
		Width		mm	930			1,173	
		Depth		mm	357			395	
Weight	Unit			kg	10			14.6	
	Packed unit			kg	11.8			17.1	
Casing	Colour				White				
	Material				High impact polystyrene				
Heat exchanger	Type				Seamless copper tubing, mechanically bonded to rippled and louvred aluminum fins.				
	Height			mm	336			378	
	Length			mm	585			790	
	Circuits	Quantity			4			9	
	Rows	Quantity			2				
	Fin	Type			Aluminium (hydrophilic fin)				
		Thickness		m^2	0.1				
	Tube material				Copper				
	Tube type				Plain				
	Tube internal diameter			mm	6.44				
	Tube step				Do not use				
Heat exchanger	Tube thickness			mm	0.28				
	Water volume			l	0.63			0.98	
Air direction control					Automatic louver (up & down)				
Air filter	Type				Gin-Ion Filter				
	Quantity			pc	2				
Fan	Type				Cross flow fan				
	Quantity				1				
	Air flow rate	Low		m^3/h	340 (3)	357 (3)	425 (3)	663 (3)	782 (3)
		Medium		m^3/h	391 (3)	416 (3)	544 (3)	765 (3)	883 (3)
		High		m^3/h	442 (3)	476 (3)	629 (3)	866 (3)	1,053 (3)
Fan motor	Model				D1C38S8P11-B0M			M3WMY10/15/18/25A-1	
	Type				DC Motor				
	Index of Protection				40			24	
	Insulation grade				Class "E"				
	Poles				8				
Insulation material					PE				
Total sound power level	Low			dBA	39 (4)		45 (4)	48 (4)	51 (4)
	Medium			dBA	43 (4)	44 (4)	52 (4)	51 (4)	54 (4)
	High			dBA	46 (4)	49 (4)	55 (4)		59 (4)
Sound pressure level	Low			dBA	25 (5)	26 (5)	32 (5)	34 (5)	39 (5)
	Medium			dBA	29 (5)	30 (5)	39 (5)	38 (5)	42 (5)
	High			dBA	34 (5)	35 (5)	42 (5)		46 (5)
Water flow	Cooling	Low		l/h	364	439	444	583	701
		Medium		l/h	400	467	551	704	781
		High		l/h	419	467	599	781	906
	Heating	High		l/h	419	467	599	781	906
		Low		l/h	364	439	444	583	701
		Medium		l/h	400	467	551	704	781
	Water pressure drop	Cooling	Low	kPa	17	18	24	13	20
			Medium	kPa	20	23	34	18	26
			High	kPa	26	30	46	25	33
		Heating	Low	kPa	18 (2)	20 (2)	23 (2)	19 (2)	28 (2)
			Medium	kPa	21 (2)	25 (2)	32 (2)	22 (2)	34 (2)
			High	kPa	27 (2)	32 (2)	44 (2)	31 (2)	45 (2)

2 Specifications

2 - 1 Specifications

2

Technical specifications				FWT02HTV	FWT03HTV	FWT04HTV	FWT05HTV	FWT06HTV
Piping connections	Water	Inlet		3/4"				
		Outlet		3/4"				
	Drain	OD	mm	16.5				

Electrical specifications				FWT02HTV	FWT03HTV	FWT04HTV	FWT05HTV	FWT06HTV
Power supply	Type			220-240 / 1 / 50				
	Phase			1~				
	Frequency		Hz	50				
	Voltage		V	220-240				
Current input	Low		A	0.07		0.09	0.11	0.16
	Medium		A	0.08		0.12	0.16	0.22
	High		A	0.10		0.16	0.22	0.32
Fan motor	Power input	Low	kW	0.007		0.010	0.015	0.020
		Medium	kW	0.008	0.009	0.016	0.020	0.027
		High	kW	0.010	0.012	0.020	0.025	0.043
	Running current	Low	A	0.07		0.09	0.11	0.16
		Medium	A	0.08		0.12	0.16	0.22
		High	A	0.10		0.16	0.22	0.32

(1)Cooling: indoor temp. 27°CDB, 19°CWB; entering water temp. 7°C, water temperature rise 5K. |
(2)Heating: 2 pipe: air 20°CDB; entering water 45°C, water temperature drop 5K. |
(3)Air flow at 0Pa ESP |
(4)Sound power level according to ISO3741 |
(5)Sound pressure measured at 1m in front of the unit and 0.8m below the vertical centre line of the unit (JIS C 9612).

3 Options

3 - 1 Options

FWT-HTV

Wired remote controller	BRC51D67
Wireless remote controller	ARC485B2
Modbus gateway (*)	FCBAG

(*) does not necessarily require a connection to the wired remote controller

4 Dimensional drawings

4 - 1 Dimensional Drawings

FWT02HTV
FWT03HTV
FWT04HTV

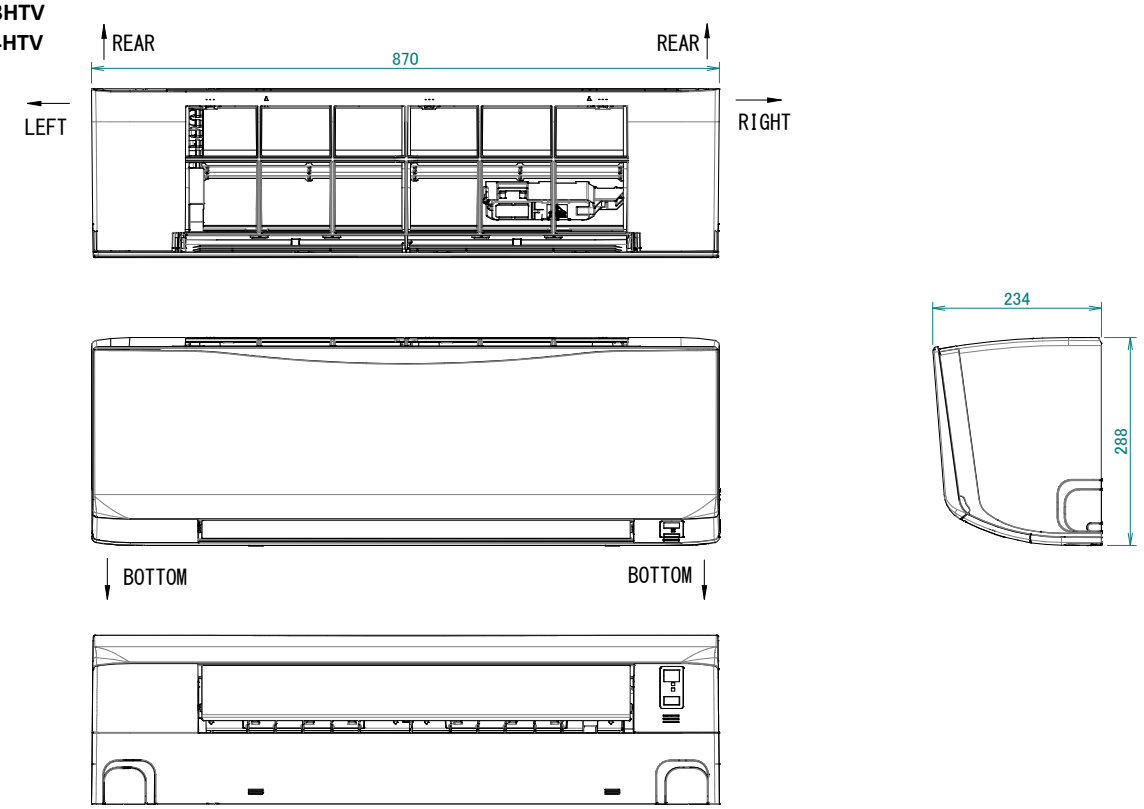

3D153410

FWT05HTV
FWT06HTV

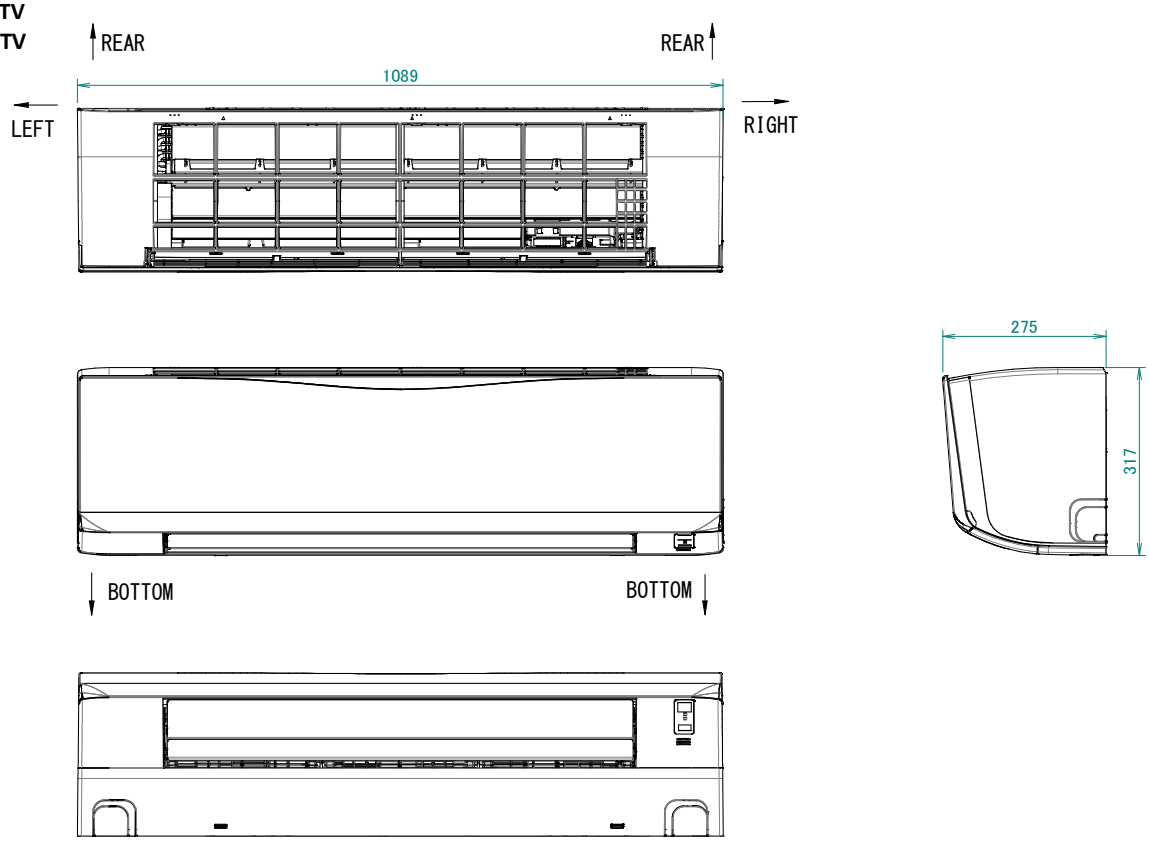

3D153418

5 Piping diagrams

5 - 1 Piping Diagrams

FWT-HTV

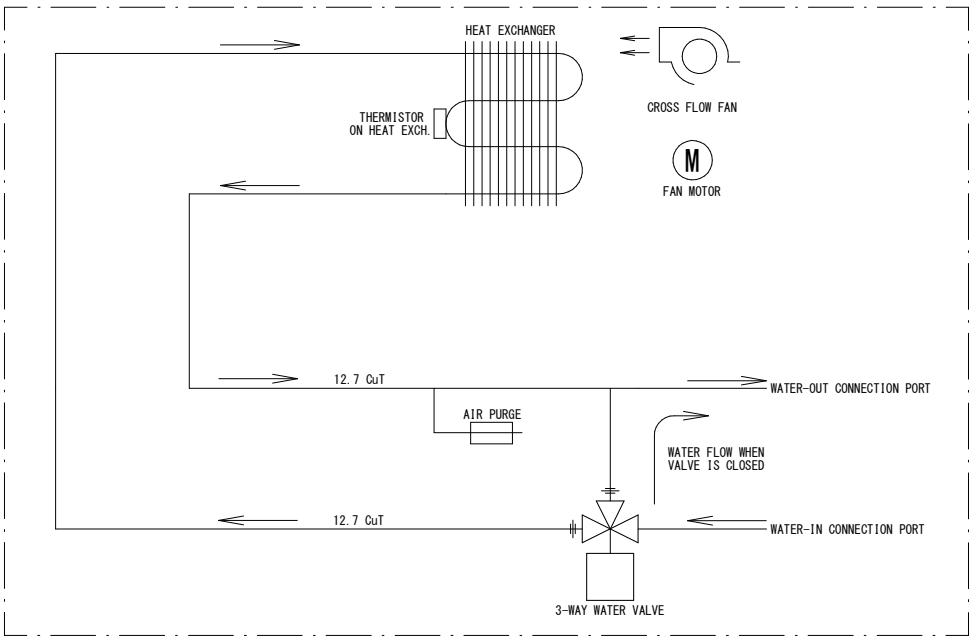

WATER PIPE CONNECTION PORT DIAMETERS

MODEL	WATER IN	WATER OUT
FWT02HATVMV1	3/4" BSPP MALE	3/4" BSPP MALE
FWT03HATVMV1	3/4" BSPP MALE	3/4" BSPP MALE
FWT04HATVMV1	3/4" BSPP MALE	3/4" BSPP MALE
FWT05HATVMV1	3/4" BSPP MALE	3/4" BSPP MALE
FWT06HATVMV1	3/4" BSPP MALE	3/4" BSPP MALE

3D153430B

6 Wiring diagrams

6 - 1 Wiring Diagrams - Single Phase

6

FWT-HTV

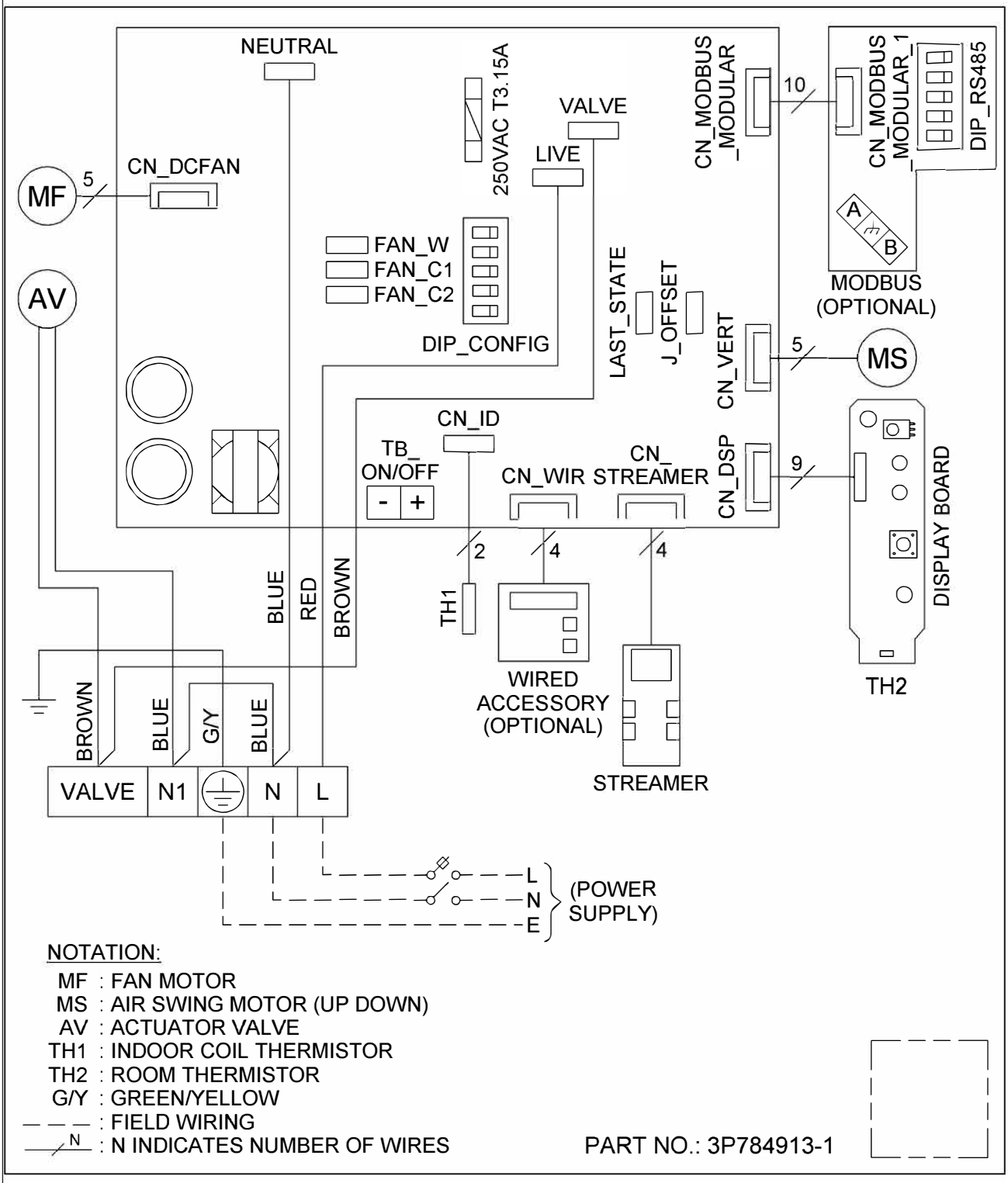

3P784913

7 Sound data

7 - 1 Sound Pressure Spectrum

FWT02HTV

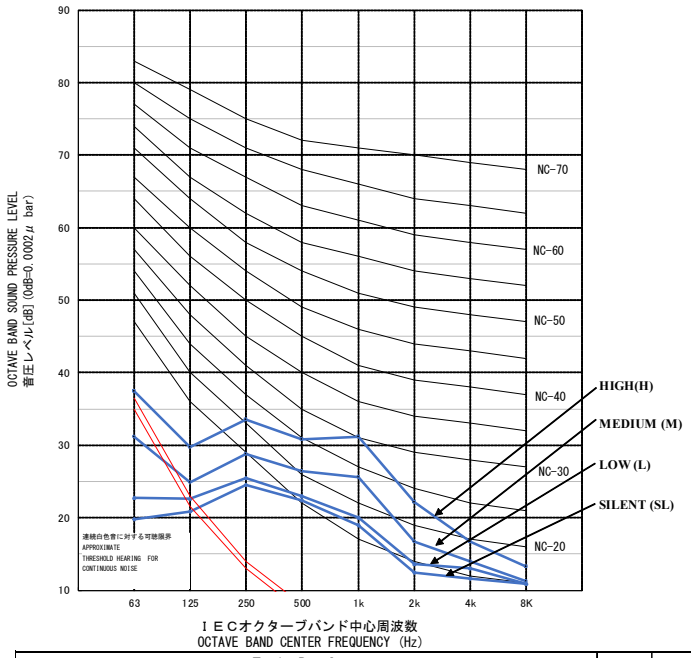

Testing Data Input									Overall (dBA)	Noise Criteria
Fan Speed	63	125	250	500	1k	2k	4k	8K		
HIGH	37	30	33	31	31	22	17	13	34	30
MEDIUM	31	25	29	26	26	17	14	11	29	24
LOW	23	23	26	23	20	14	13	11	25	18
SILENT	20	21	25	22	19	12	12	11	24	17

測定場所 MEASURING PLACE

無響室
ANECHOIC CHAMBER

注)運転音は、運転条件、周囲の状態等によって変ります。
NOTE: OPERATION NOISE DIFFERS WITH OPERATION AND AMBIENT CONDITIONS.

運転条件 OPERATING CONDITIONS

電源
POWER SOURCE 220-240V 50Hz

マイクロホン位置 LOCATION OF MICROPHONE

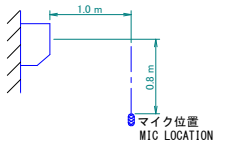

3D153614

FWT03HTV

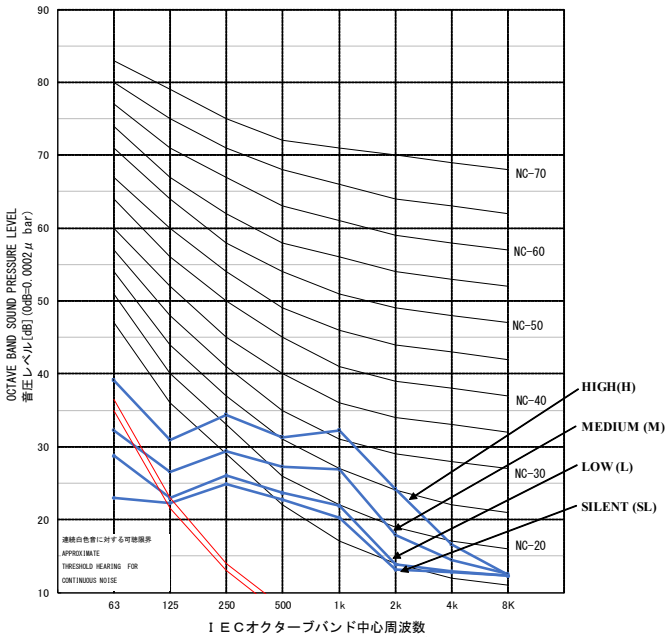

Testing Data Input									Overall (dBA)	Noise Criteria
Fan Speed	63	125	250	500	1k	2k	4k	8K		
HIGH	39	31	34	31	32	24	17	12	35	31
MEDIUM	32	27	29	27	27	18	14	13	30	25
LOW	29	23	26	24	22	14	13	12	26	20
SILENT	23	22	25	23	20	13	13	12	25	18

測定場所 MEASURING PLACE

無響室
ANECHOIC CHAMBER

注)運転音は、運転条件、周囲の状態等によって変ります。
NOTE: OPERATION NOISE DIFFERS WITH OPERATION AND AMBIENT CONDITIONS.

運転条件 OPERATING CONDITIONS

電源
POWER SOURCE 220-240V 50Hz

マイクロホン位置 LOCATION OF MICROPHONE

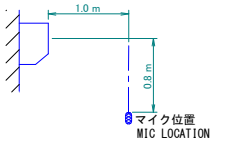

3D153613

7 Sound data

7 - 1 Sound Pressure Spectrum

7

FWT04HTV

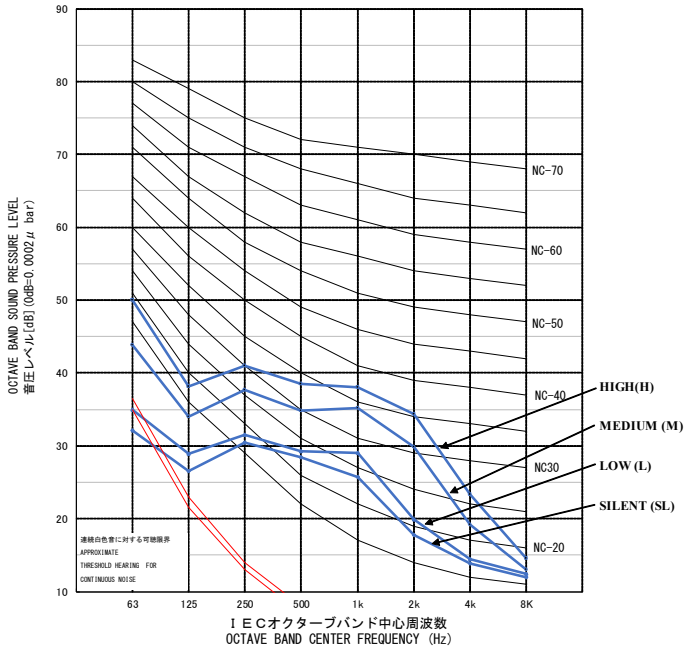

測定場所 MEASURING PLACE

無響室
ANECHOIC CHAMBER

注)運転音は、運転条件、周囲の状態等によって変ります。

NOTE: OPERATION NOISE DIFFERS WITH OPERATION AND AMBIENT CONDITIONS.

運転条件 OPERATING CONDITIONS

電源
POWER SOURCE 220-240V 50Hz

マイクロホン位置 LOCATION OF MICROPHONE

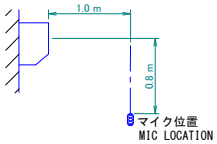

Testing Data Input									Overall (dBA)	Noise Criteria
Fan Speed	63	125	250	500	1k	2k	4k	8K		
HIGH	50	38	41	38	38	34	23	15	42	37
MEDIUM	44	34	38	35	35	30	19	13	39	34
LOW	35	29	32	29	29	20	14	12	32	28
SILENT	32	27	30	28	26	18	14	12	29	24

3D153612

FWT05HTV

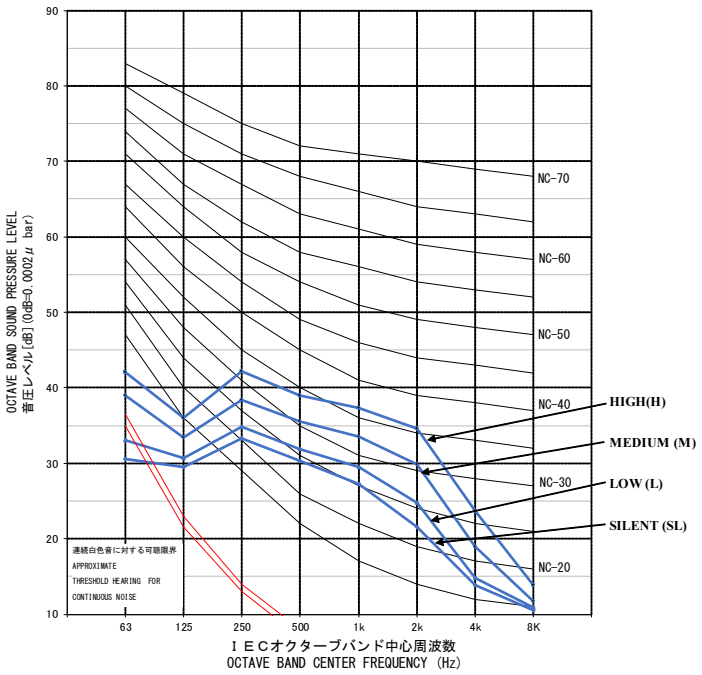

測定場所 MEASURING PLACE

無響室
ANECHOIC CHAMBER

注)運転音は、運転条件、周囲の状態等によって変ります。

NOTE: OPERATION NOISE DIFFERS WITH OPERATION AND AMBIENT CONDITIONS.

運転条件 OPERATING CONDITIONS

電源
POWER SOURCE 220-240V 50Hz

マイクロホン位置 LOCATION OF MICROPHONE

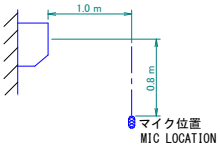

Testing Data Input									Overall (dBA)	Noise Criteria
Fan Speed	63	125	250	500	1k	2k	4k	8K		
HIGH	42	36	42	39	37	35	24	14	42	36
MEDIUM	39	33	38	36	34	30	19	12	38	33
LOW	33	31	35	32	30	25	15	11	34	29
SILENT	31	30	33	30	27	22	14	11	32	25

3D153494

7 Sound data

7 - 1 Sound Pressure Spectrum

FWT06HTV

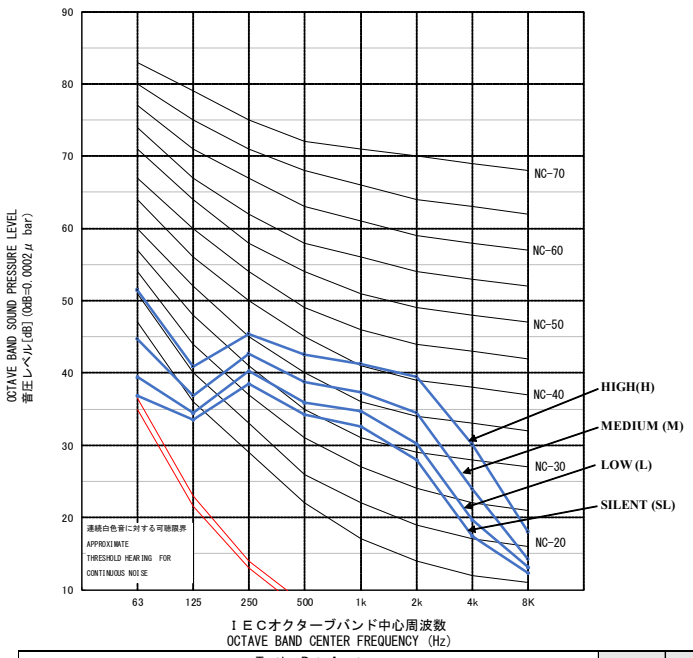

測定場所 MEASURING PLACE

無響室
ANECHOIC CHAMBER

注)運転音は、運転条件、周囲の状態等によって変ります。

NOTE: OPERATION NOISE DIFFERS WITH OPERATION AND AMBIENT CONDITIONS.

運転条件 OPERATING CONDITIONS

電源 POWER SOURCE	220-240V 50Hz

マイクロホン位置 LOCATION OF MICROPHONE

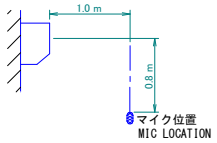

Testing Data Input									Overall (dBA)	Noise Criteria
Fan Speed	63	125	250	500	1k	2k	4k	8K		
HIGH	51	41	45	43	41	39	30	18	46	40
MEDIUM	45	37	43	39	37	35	24	14	42	36
LOW	40	35	40	36	35	30	20	13	39	34
SILENT	37	34	39	34	33	28	17	12	37	32

3D153493

8 Installation

8 - 1 Exploded view

FWT02HTV
FWT03HTV
FWT04HTV

NO	DESCRIPTION
1	BOTTOM FRAME ASSY
2	DRAIN PAN ASSY
2.1	STEPPING MOTOR
3	MOTOR MOUNTING PLATE (1)
4	MOTOR MOUNTING PLATE (2)
5	FAN MOTOR (DC)
6	MOTOR MOUNTING PLATE (3)
7	CROSS FLOW FAN ASSY
8	FAN BEARING VIBRATION ABSORBER ASSY (M)
9	RIGHT SIDE PANEL(RESIN)
10	HEAT EXCHANGER ASSY
10.1	MOTOR OPERATED VALVE BODY (1770853)
11	DRAIN HOSE ASSY
12	INSTALLATION PLATE ASSY
13	EL.COMPO.ASSY
13.1	CONTROL MODULE
13.2	INDOOR COIL SENSOR
13.3	PRINTED CIRCUIT BOARD ASSY (DISPLAY)
13.4	ASSY, HARNESS WIRE
13.5	TERMINAL BLOCK
14	SHIELD PLATE(2)
15	DRAIN PAN ASSY (RESIN) EXTENSION
16	FRONT GRILLE ASSY
16.1	FRONT PANEL
17	DISCH.GRILLE HOR.BLADE ASSY
18	AIR FILTER
19	SERVICE COVER ASSY
20	SEALING PLATE (TOP)
21	AIR FILTER PM2.5
22	SIDE PANEL (LEFT)
23	COVER ASSY, STREAMER (HOLDER)
23.1	DISCHARGE PLATE STREAMER ASSY
24	WIRE HARNESS ASSY (ACTUATOR WIRE)
25	REDUCING SOCKET ADAPTOR

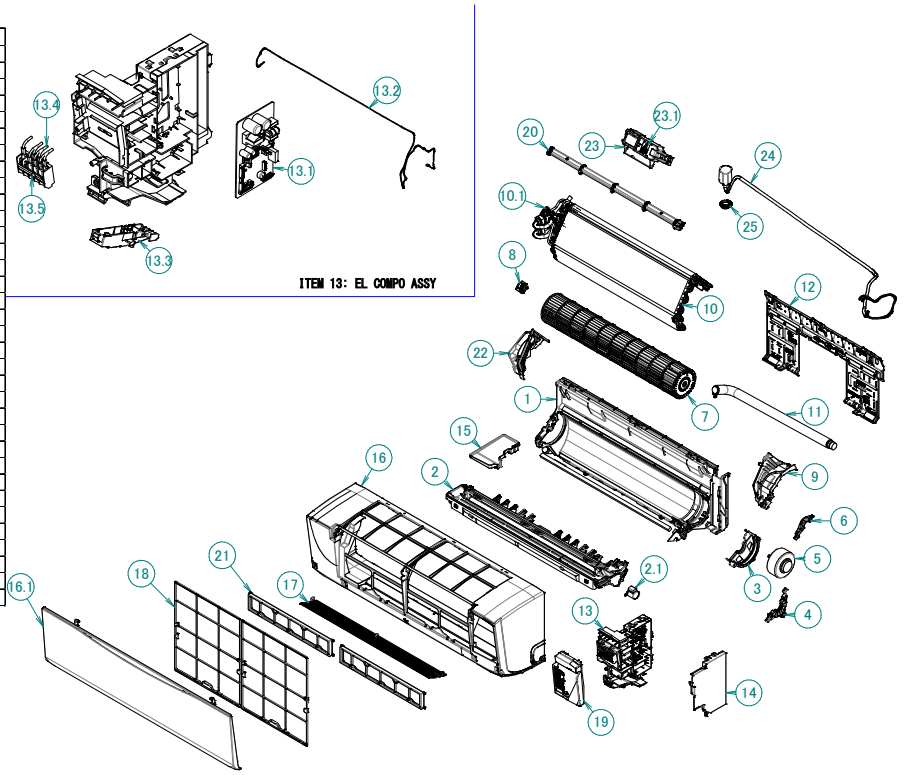

3D153587

FWT05HTV
FWT06HTV

1	BOTTOM FRAME ASSY
2	DRAIN PAN ASSY
2.1	STEPPING MOTOR
3	MOTOR MOUNTING PLATE (1)
4	MOTOR MOUNTING PLATE (2)
5	FAN MOTOR (DC)
6	MOTOR MOUNTING PLATE (3)
7	CROSS FLOW FAN ASSY
8	FAN BEARING VIBRATION ABSORBER ASSY (M)
9	HEAT EXCHANGER ASSY
9.1	RIGHT SIDE PANEL(RESIN)
9.2	MOTOR OPERATED VALVE BODY (1776361)
10	DRAIN HOSE ASSY
11	INSTALLATION PLATE ASSY
12	EL.COMPO.ASSY
12.1	CONTROL MODULE
12.2	INDOOR COIL SENSOR
12.3	PRINTED CIRCUIT BOARD ASSY (DISPLAY)
12.4	ASSY, HARNESS WIRE
12.5	TERMINAL BLOCK
13	SHIELD PLATE(2)
14	DRAIN PAN ASSY (RESIN) EXTENSION
15	FRONT GRILLE ASSY
15.1	FRONT PANEL
16	DISCH.GRILLE HOR.BLADE (1) ASSY
17	DISCH.GRILLE HOR.BLADE (2) ASSY
18	AIR FILTER
19	SERVICE COVER ASSY
20	SEALING PLATE (TOP)
21	AIR FILTER PM2.5
22	LEFT SIDE PANEL (RESIN)
23	COVER ASSY, STREAMER (HOLDER)
23.1	DISCHARGE PLATE STREAMER ASSY
24	WIRE HARNESS ASSY (ACTUATOR WIRE)
25	REDUCING SOCKET ADAPTOR

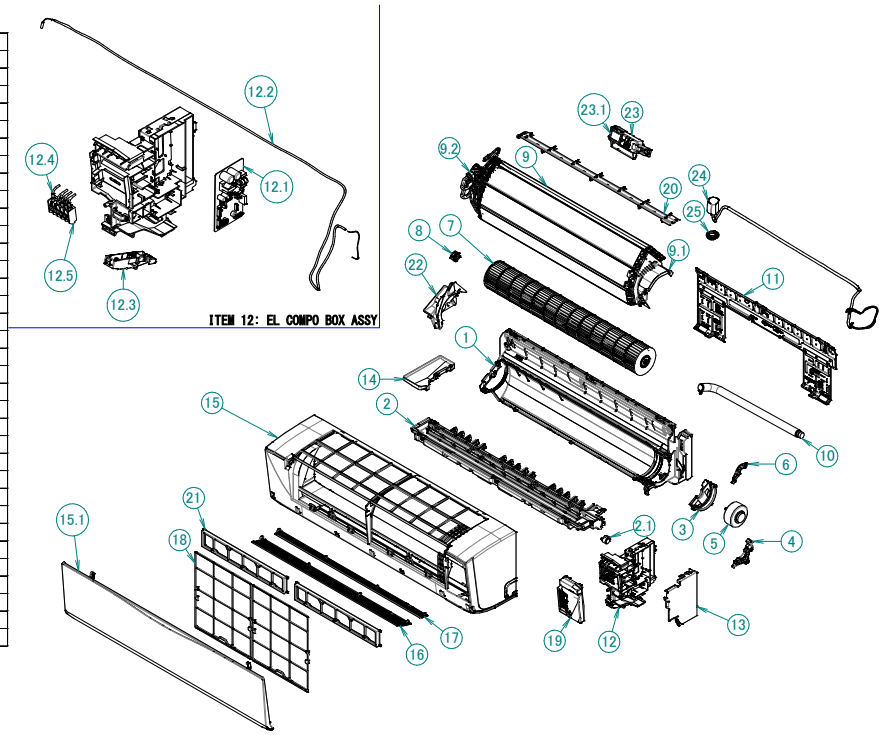

3D153588A

Daikin Europe N.V. Naamloze Vennootschap · Zandvoordestraat 300 · 8400 Oostende · Belgium · www.daikin.eu · BE 0412 120 336 · RPR Oostende (Responsible Editor)

Daikin Europe N.V. participates in the ECP programmes for Fan Coil Units and Variable Refrigerant Flow systems. Daikin Applied Europe S.p.A. participates in the ECP programmes for Liquid Chilling Packages and Hydronic Heat Pumps. Check ongoing validity of certificate: www.eurovent-certification.com

EEDEN25 01/2025

The present leaflet is drawn up by way of information only and does not constitute an offer binding upon Daikin Europe N.V.. Daikin Europe N.V. has compiled the content of this leaflet to the best of its knowledge. No express or implied warranty is given for the completeness, accuracy, reliability or fitness for particular purpose of its content and the products and services presented therein. Specifications are subject to change without prior notice. Daikin Europe N.V. explicitly rejects any liability for any direct or indirect damage, in the broadest sense, arising from or related to the use and/or interpretation of this leaflet. All content is copyrighted by Daikin Europe N.V.